Babble Bar Prototype Hardware

The Babble Bar hardware consists of an Arduino-like proto shield, which includes a microphone as well as an amplifier circuit to boost the audio signal.

The problem with a conventional electret microphone is that the output signal is rather small in the order of a few millivolts, and a big DC component of around 1V. If this output is directly measured with a micro controller's ADC, the resolution would be rather low. To get a better resolution of the audio signal, we need a circuit that amplifies the AC component of the signal, but not the DC component (as this would quickly drive the signal into saturation).

Many such circuits exist, but we needed a circuit that can be accomplished with a general purpose Operational Amplifier LM358 since this was the only part that we had at hand. Also, we wanted the circuit to only use a single positive supply of 3.3V.

The following schematic is the circuit used in the Babble Bar prototype hardware.

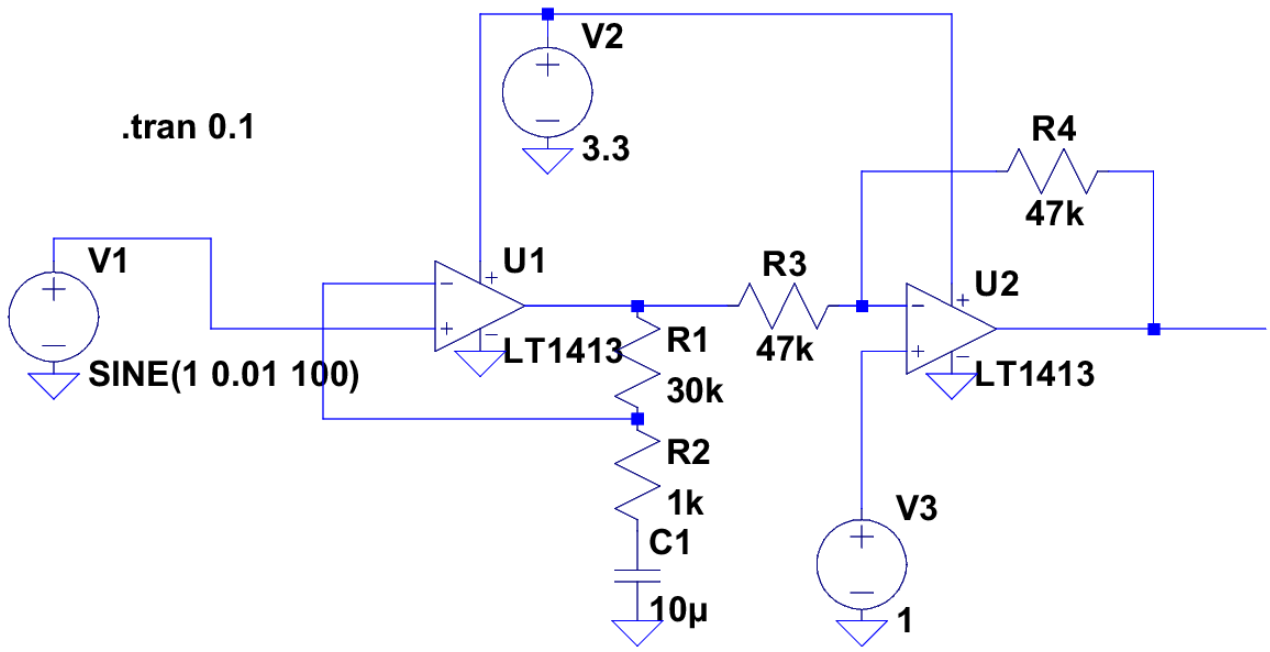

In the above schematics, the input from the electret microphone is simulated by a sine wave with a DC offset of 1.0V. The first amplifier stage boosts the AC signal by a factor 1+30/1=31. The DC signal is passed though without amplification: in the case of DC, the capacitor C1 does not allow current to flow through, and thus the first amplifier stage acts as a voltage follower.

The second amplifier stage inverts the signal and adds an offset, which can be controlled by V3. In the finished circuit, the value of V3 is controlled by a potentiometer. Also, the resistor R1 is a potentiometer with a value ranging from 0...100k, thus the maximum amplification is around 100.

After simulation, the circuit was prototyped and tested on a breadboard.

In a third step, the circuit has been soldered onto a protoboard.

Firmware

The firmware calculates the Sound Pressure Level (SPL) in Decibel using root mean squares. In this first approach, approximately a quarter second is sampled and an SPL value is calculated. The value that is sent via LoRA is a weighted moving average of the current SPL value and the last two values.